VB – 6A
VB – 3A

Analog Input and Output Combined Module

User Manual

Foreword

- This manual contains text, diagrams and explanations which will guide the reader in the correct installation, safe use and operation of the VB-6A and VB-3A analog Input/Output combined modules. It should be read and understood before attempting to install or use the unit.
- Further information can be found in the VIGOR M, VB and VH series PLC PROGRAMMING MANUAL.
- If in doubt at any stage during the installation of the VB-6A or VB-3A analog Input/Output combined module always consult a professional electrical engineer who is qualified and trained to the local and national standards.
- If in doubt about the operation or use of the VB-6A or VB-3A analog Input/Output combined module, please consult the nearest VIGOR ELECTRIC CORP. distributor.
- This manual is subject to change without notice.

Features

- The VB-6A provides 4 channels analog input and 2 channels analog output, each I/O has12-bit high precision resolution.
- The VB-3A provides 2 channels analog input and 1 channel analog output, each I/O has12-bit high precision resolution.
- The voltage (-10 V ~ +10 V) or current (-20 mA ~ +20 mA) input can be specified for each channel independently.
- The voltage (0 V ~ +10 V) or current (+4 mA ~ +20 mA) output can be specified for each channel independently.
- The OFFSET and GAIN of each input / output channel can adjust independently.
- Equipped with a 10 V DC accurately standard voltage output (60 mA Max.), offers reference power source for the linear potentiometer.
- Photocoupler isolation between input analog signals and digital PLC circuits. Inner DC to DC isolated converter supplies the clean power.

Instruction

- VB-6A Analog Input/Output Combined Module contains 4 channels of analog inputs and 2 channels of analog outputs. Each input channel receives an external analog (either voltage or current) signal then converts that to a 12-bit digital data for the PLC. And each output channel receives a 12-bit digital signal from the PLC then converts that to an analog (either voltage or current) signal output.
- VB-3A Analog Input/Output Combined Module contains 2 channels of analog inputs and 1 channel of analog output. Each input channel receives an external analog (either voltage or current) signal then converts that to a 12-bit digital data for the PLC. And the output channel receives a 12-bit digital signal from the PLC then converts that to an analog (either voltage or current) signal output.
- Through the operation of the FROM / TO instruction, such digital data can be transferred for monitoring the status and inputs of module, and furthermore data from the VB Series Main Unit for relative analog control output(s).
- Please read this user manual carefully before using the VB-6A or VB-3A Analog Input/Output Combined Module.
- The default A/D and D/A transfer modes are good enough for general applications. The chapter 5-3 and 6-3 are for a particular A/D and D/A transfer characteristics adjustment, please skip those chapters if using the default modes.

Contents:

1. Specifications

<< Power Input Requirement >>

- 5 V DC (for internal control)
  Supplied from PLC Main Unit (or Expansion Unit / VB-PWR) via its extension cable.
  - From a Main Unit:
    [(The amount of Expansion Modules) + (The amount of Special Modules) X 2] ≤ 4
  - From a Expansion Unit or VB-PWR:
    [(The amount of Expansion Modules) + (The amount of Special Modules) X 2] ≤ 12
- 24 V DC (±20%), VB-6A: 210 mA / VB-3A: 160 mA (Max.) (for analog signal output)
  Supplied from external power supply or 24V DC output of PLC.

<< 10 V Accurately Standard Voltage Output >>

Output: 10 V DC ±0.5%, 60 mA (Max.)

<< Analog Input Performance Specification >>

Item	Voltage Input	Current Input
	Voltage or Current inputs are selected by BFM #0 and sliding switches	
Analog Input Range (DC)	-10 V ~ +10 V	-20 mA ~ +20 mA / +4 mA ~ +20 mA
Digital Output Range	-2000 ~ +2000	-2000 ~ +2000 / 0 ~ +2000
Input Resistance	200 kΩ	250 Ω
Resolution	5 mV	10 μA
Overall Accuracy	± 1% (full scale)	
Conversion Speed	0.5 ms × 1 ~ 4 activated point(s)	
Isolation	Photocoupler isolation between analog and digital circuits. DC/DC converter isolates of power from its power source. No isolation between analog channels.	
Absolute Max. Peak Rating	± 15 V	± 32 mA

<< Charts of A/D Converter Characteristic >>

The charts of several default A/D converted characteristics. (Which can be adjusted by using the approach specified at Chapter #5-3 Defining OFFSET and GAIN of Analog Analog Input.)

Mode **0**: Voltage Input
(Range: -10 V ~ +10 V)

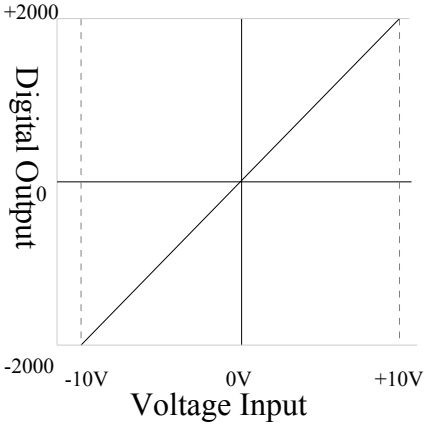

Mode **1**: Current Input
(Range: +4 mA ~ +20 mA)

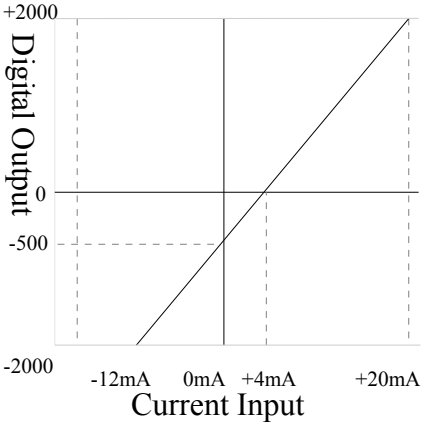

Mode **2**: Current Input
(Range: -20 mA ~ +20 mA)

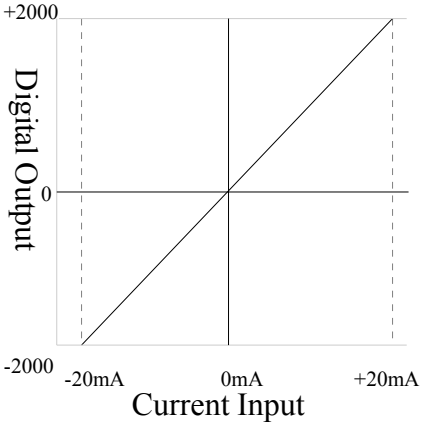

<< Analog Output Performance Specification >>

Item	Voltage Output	Current Output
	Voltage or Current outputs are selected by BFM #20 & different terminals	
Mode	**0**	**1**
Analog Output Range (DC)	0 ~ +10 V	+4 ~ +20 mA
Digital Input Range	0 ~ +4000	0 ~ +4000
External Load Resistance	500 Ω ~ 1 MΩ	500 Ω or less
Resolution	2.5 mV	5 μA
Overall Accuracy	± 1% (full scale)	
Conversion Speed	0.4 ms / 2 points	
Isolation	Photocoupler isolation between analog and digital circuits. DC/DC converter isolates of power from its power source. No isolation between analog channels.	

<< Charts of D/A Converter Characteristic >>

The charts of two default D / A converted characteristics. (Which can be adjusted by using the approach specified at Chapter #6-3 Defining OFFSET and GAIN of Analog Output.)

Mode **0**: Voltage Output (Range: 0 V ~ +10 V)

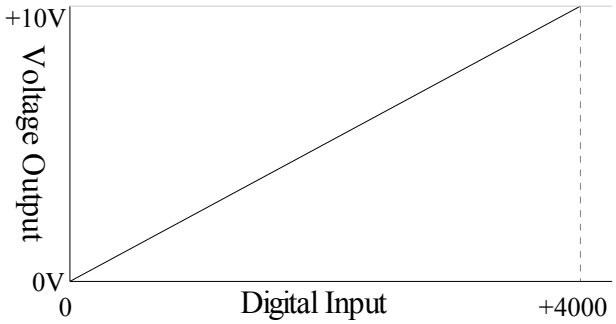

Mode **1**: Current Output (Range: +4 mA ~ +20 mA)

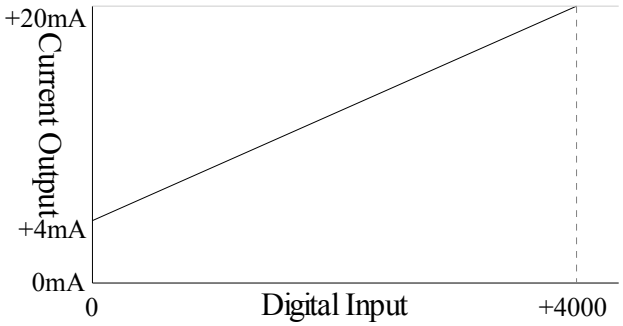

2. Dimensions

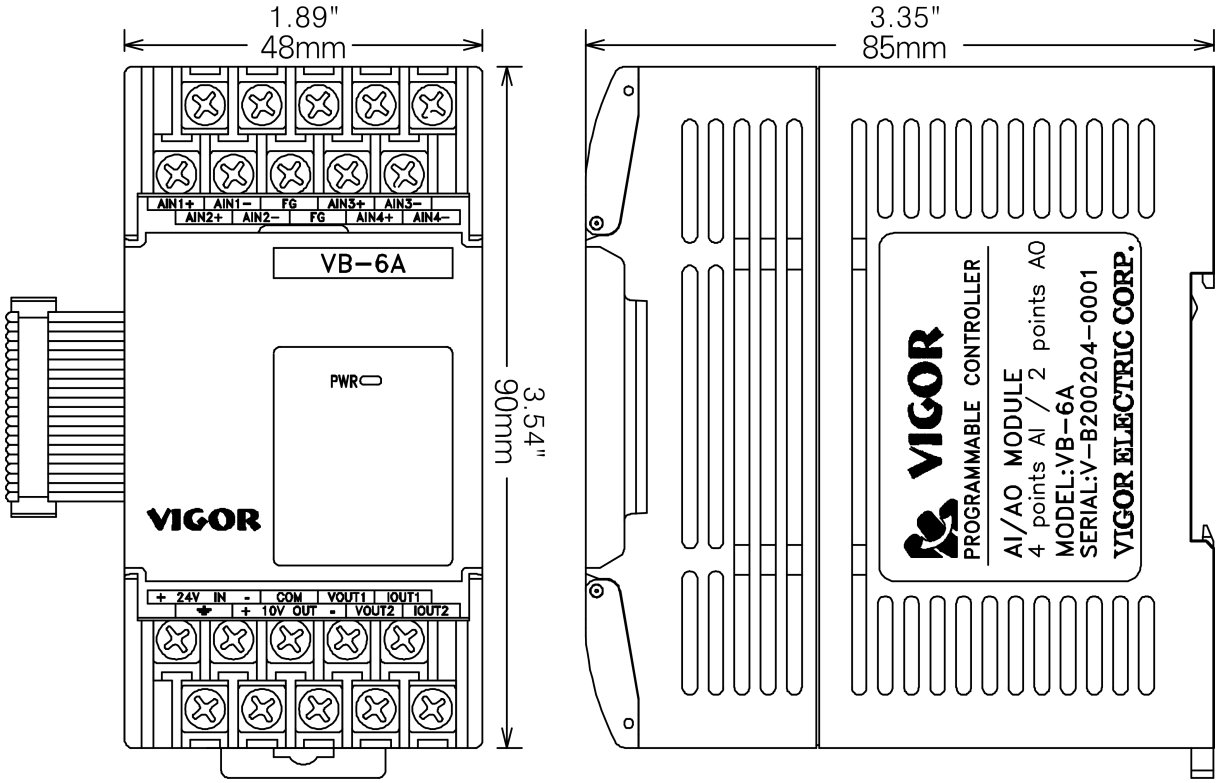

3. Wiring

3-1. Terminal Layouts of Analog Input Part

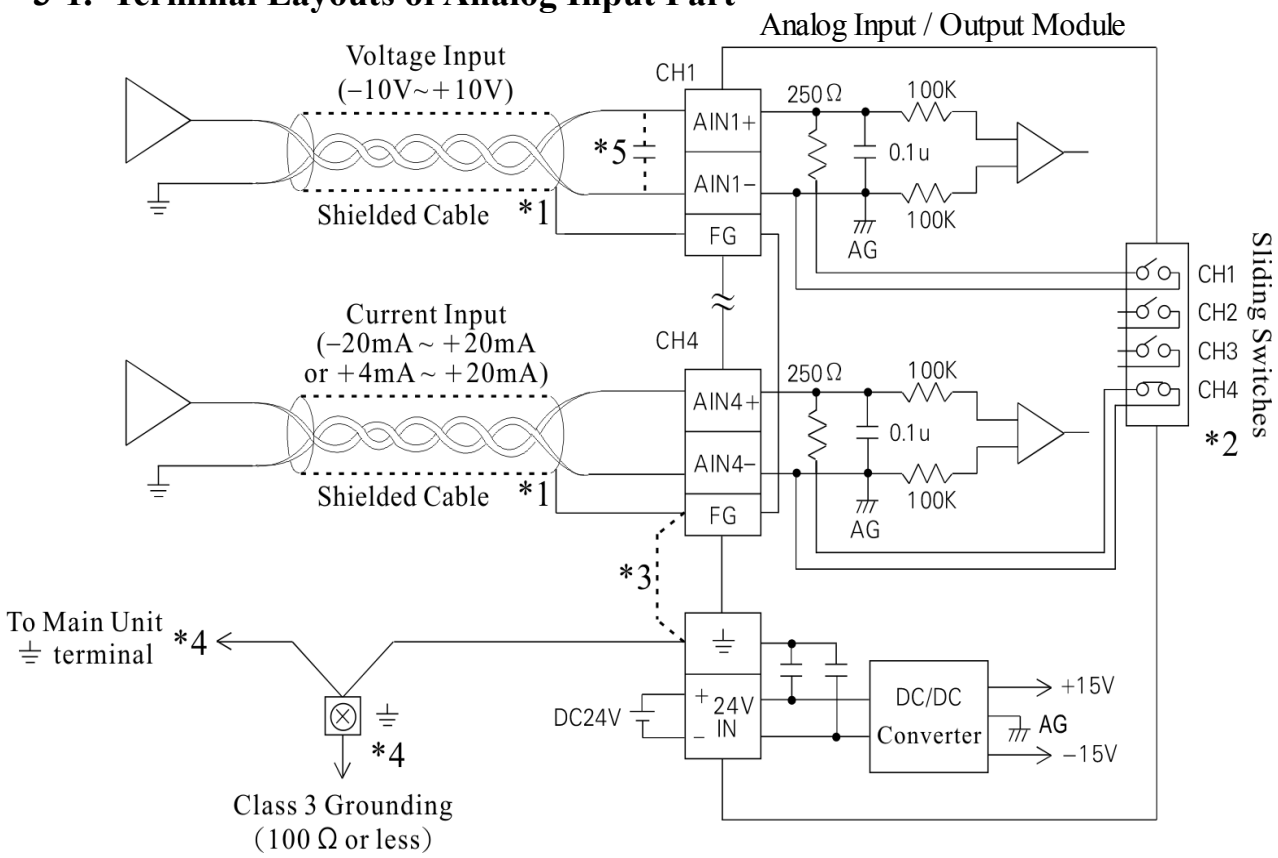

*1: Please use the Shield Twisted-Pair isolation cable for each analog input channel and keep the cable away from the electromagnetic interference source (ex. power lines or any other lines which may induce electrical noise). Apply 1-point grounding at the FG frame ground terminal on the module.

*2: Please pay attention to the following keynotes when to decide the input (voltage or current) of each channel.

① Adjust the appropriate mode setting of BFM #0 for each channel. (please refer to Chapter # 5-1 Allocation of Buffer Memory (BFM) About Analog Input)

② Adjust the appropriate position of sliding switch for each channel (which is located on the left side of the module).

By referring to the switch diagram:
The upper (OFF) position is for the voltage mode
The lower (ON) position is for the current mode

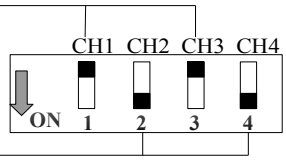

*3. If there is excessive electrical noise, connect the FG frame ground terminal with the grounded terminal on the VB-6A / VB-3A.

*4. Connect the ground terminal ⏚ on the VB-6A / VB-3A module with the grounded terminal ⏚ to the Main Unit. Use class 3 grounding on the Main Unit, if available.

*5. If a voltage ripple occurs during input or there is electrically induced noise on the external wiring, parallel connect with a smoothing capacitor (0.1μ ~ 0.47μF, 25 V).

3-2. Terminal Layouts of Analog Output Part

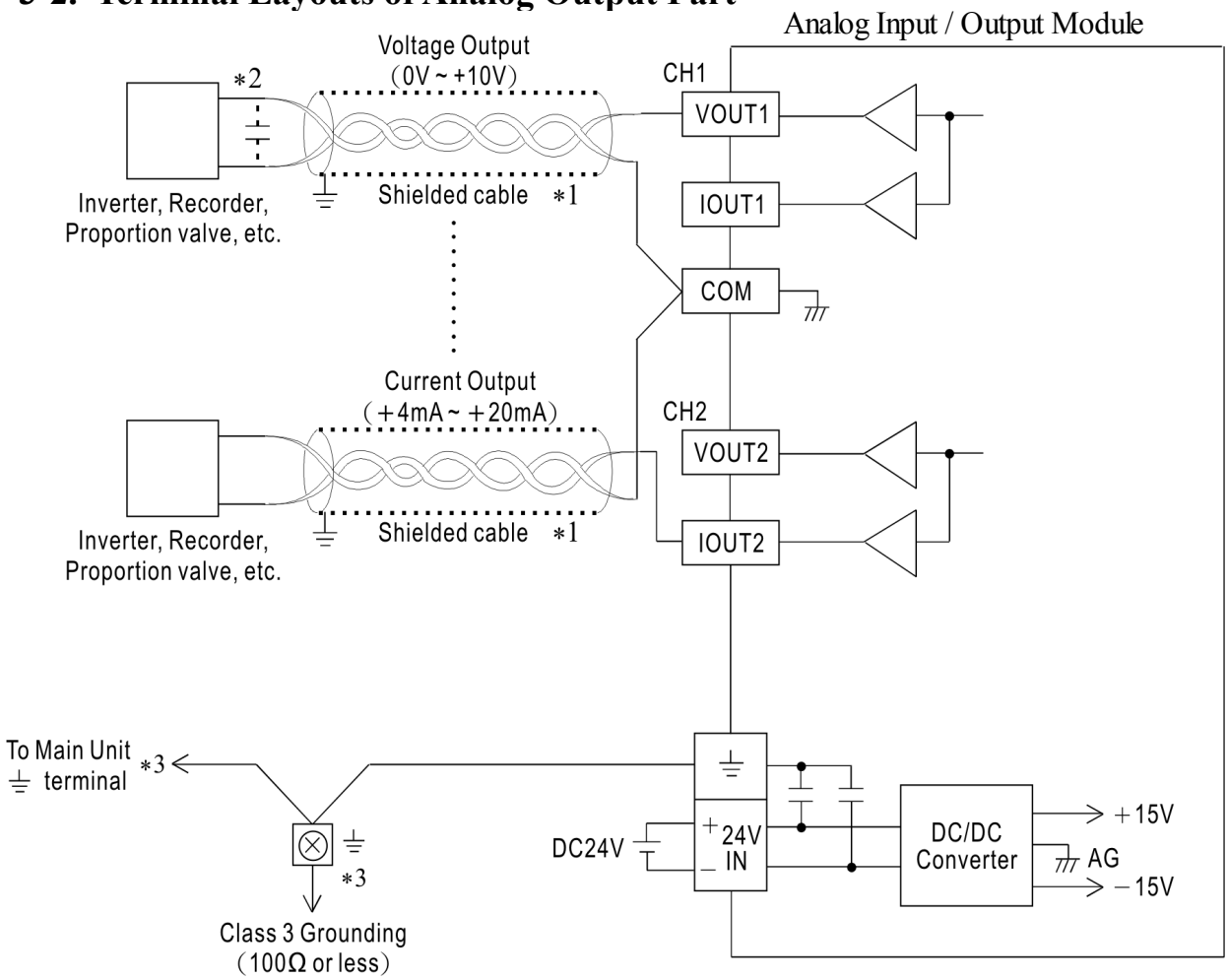

*1: Please use the Shield Twisted-Pair isolation cable for each analog output channel and keep the cable away from the electromagnetic interference source (ex. power lines or any other lines which may induce electrical noise). Apply 1-point grounding at the load side of the output cable (class 3 grounding: 100 Ω or less).

*2: If electrical noise or a voltage ripple exists at the output, must connect a smoothing capacitor of 0.1 ~ 0.47 μF, 25 V.

*3: Connect the ⏚ terminal on the VB-6A / VB-3A with the ⏚ terminal on the Main Unit of the programmable controller.

- Mixed (voltage and current) output from the same channel is not possible.
- Shorting the voltage output terminal or connecting the current output load to the voltage output terminal may damage the VB-6A / VB-3A.
- The 24 V DC service power of the PLC Main Unit can also be used.
- Do not connect any unit to the unused terminal.

4. Outline of FROM/TO Instruction

D	FNC 78 FROM	P	⊢⊣ DFROMP m1 m2 D n	Read special module BFM

Device																
	X	Y	M	S	KnX	KnY	KnM	KnS	T	C	D	SD	P	V,Z	K,H	VZ index
m1															○	
m2															○	
D						○	○	○	○	○	○					○
n															○	

● m1 = 1~8 ● m2 = 0~32767 ● n = 1~32767

```
X0          m1  m2  D   n
 ⊣⊢ FROM  K1  K5  D0  K4
```

m1: The position number of the specified special module
m2: Initial serial number of the BFM(s) to be read
D: The initial device of storage(s) for collect the picked up data
n : Number of data group(s) to be read

- The Main Unit of VB Series PLC use the instruction to read BFM data of the special module.
- When X0="ON", 4 groups (they will be the BFM #5~#8, because n = K4 and m2 = K5) data in the specified special module (which is installed in the m1 = K1 = 1st. position) will be read and stored into registers sequentially which are started from D = D0 .
- To assign the m1 in a VB Series, each special module is consecutively assigned from K1 to K8 (in a VB0 Series, m1 = K1 or K2), it begins with the closest one to the Main Unit.
- When X0="OFF", the instruction will not be performed but the data (which was read previously) will still remain.

D	FNC 79 TO	P	⊢⊣ DTOP m1 m2 S n	Special module BFM write in

Device																
	X	Y	M	S	KnX	KnY	KnM	KnS	T	C	D	SD	P	V,Z	K,H	VZ index
m1															○	
m2															○	
S					○	○	○	○	○	○	○				○	○
n															○	

● m1 = 1~8 ● m2 = 0~32767 ● n = 1~32767

```
X0          m1  m2  S   n
 ⊣⊢ TO    K1  K0  D0  K1
```

m1: The position number of the specified special module
m2: Initial serial number of the BFM(s), which will be written
S : The initial source device, which stores the data is for the BFM
n : Number of data group(s) to be write

- The Main Unit of VB series PLC use this instruction to write data to the special module BFM.
- When X0="ON", the content value of S (D0) will be written into the BMF #0 (m2 = K0) in the special module and it is installed in the 1st. (m1 = K1) position. Since n = K1, there is only one BFM will be written.
- To assign the m1 in a VB Series, each special module is consecutively assigned from K1 to K8 (in a VB0 Series, m1 = K1 or K2), it begins with the closest one to the Main Unit.
- When X0="OFF", the instruction will not be performed but the data (which was written previously) will still remain.

5. Analog Input Operating Instruction

The VB-6A module provides 4 channels analog input, they are CH1 ~ CH4; the VB-3A module provides 2 channels analog input, they are CH1 & CH2. So when operating the VB-3A module, please refer to the parts about CH1 & CH2.

5-1. Allocation of Buffer Memory (BFM) About Analog Input

Data is transmitted between the VB-6A / VB-3A and the Main Unit via buffer memories (BFM).

BFM		Description
#0		To organize the input mode of CH #1 ~ CH #4 (with latch function). Default value = H0000
#1	CH #1	● Contains the number of samples to be used for an averaged result. ● The available rang is K1 ~ K32,767; otherwise = K32. ● Default value = K32 (when the PLC power, OFF→ON)
#2	CH #2	
#3	CH #3	
#4	CH #4	
#5	CH #1	● These BFMs contain the averaged input values for the number of samples entered, they are from the channels CH1 ~ CH4 and bring the values of BFM #1 ~ #4 out respectively. (Read only)
#6	CH #2	
#7	CH #3	
#8	CH #4	

- The value of BFM #0 switches the modes between voltage or current analog input on each channel. It takes the form of a 4-digit hexadecimal number. The first digit will be the command for channel 1 (CH1), and the second digit for channel 2 (CH2), and so forth. The numeric values of these four digits respectively represent the following items:

BFM #0 = H O O O O ==>

b15			b0
Digit #4	Digit #3	Digit #2	Digit #1
CH4	CH3	CH2	CH1

(O ↑ ④, O ↑ ③, O ↑ ②, O ↑ ①)

When: O = 0 : Sets the channel to voltage input mode (-10 V ~ +10 V).
O = 1 : Sets the channel to current input mode (+4 mA ~ +20 mA).
O = 2 : Sets the channel to current input mode (-20 mA ~ +20 mA).
O = 3 : Disables the channel.

Switching the output mode resets the I/O characteristics to the factory-set characteristics. Refer to the section of << Charts of A/D Converter Characteristic>>.

Example: Let the BFM #0 = H 3 2 1 0

CH1 = 0 : Voltage output (-10 V ~ +10 V)
CH2 = 1 : Current output (+4 mA ~ +20 mA)
CH3 = 2 : Current output (-20 mA ~ +20 mA)
CH4 = 3 : Disabled.

- The value of BFM #0 ~ #4 can be written from its Main Unit by using the TO instruction.
- The value of BFM #5 ~ #8 can be read to its Main Unit by using the FROM instruction.

BFM	Description
#9	To activate the excepted settings
#10	The OFFSET value of the CH1 (Default value = K0)
#11	The GAIN value of the CH1 (Default value = K5,000)
#12	The OFFSET value of the CH2 (Default value = K0)
#13	The GAIN value of the CH2 (Default value = K5,000)
#14	The OFFSET value of the CH3 (Default value = K0)
#15	The GAIN value of the CH3 (Default value = K5,000)
#16	The OFFSET value of the CH4 (Default value = K0)
#17	The GAIN value of the CH4 (Default value = K5,000)
#18	When its b0 = 1, all the A/D converted characteristics will be returned to the default values.
#19	When the content values of BFM #1 ~ #4 are between 1~32,767, the b11 = OFF; Otherwise = ON. (Read only)
#20~29	Reserved, do not use.
#30	Model code: VB-6A = K103 ; VB-3A = K104 (Read only)

- When to trigger the BFM #18, b0 = 1, all the analog to digital converted characteristics (including CH1 ~ CH4) will be returned to the default values. If a user sets incorrect converted characteristics to the module, to trigger the BFM #18, b0 =1 which can reset all the converted characteristics back to their default settings.
- When to trigger the BFM #9 (b1,b0) = (1,1), the content values of BFM #10 and #11 (which are the converted characteristics for CH1) will be activated and recorded to the EEPROM. And so forth, the b2 ~ b7 in the BFM #9 can use the same effect on the CH2 ~ CH4, which may be set up the CH1 ~ CH4 respectively or simultaneously.

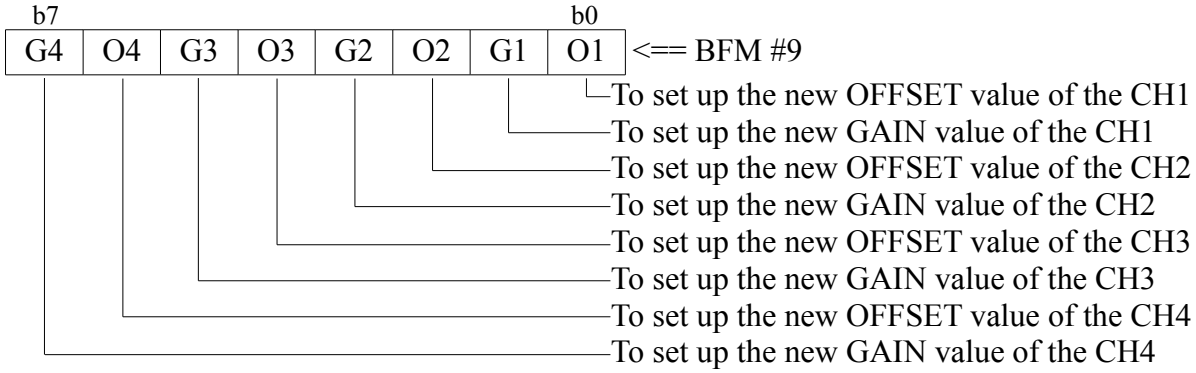

- The settings of BFM #10 ~ #17 shall be in the unit of mV or μA, which are specified by the input mode of BFM #0.
- The BFM #9 ~ #18 can be written from its Main Unit by using the TO instruction; the BFM#19 and BFM #30 can be read to its Main Unit by using the FROM instruction.
- To adjust the conversion characteristics. First, the OFFSET value and GAIN value of the channel are required to be written (in BFM #10 ~ #17); and then, to trigger the corresponding bit in BFM #9.

Cautions

- The content value of BFM #0, OFFSET and GAIN settings (BFM #10 ~ #17) of each channel will be kept in EEPROM of the module. Also, to reset the settings by BFM #18 will rewrite the data in EEPROM. The rewrite times of EEPROM is 10,000 times approximately; to operate those BFMs (#0, 10~17 and 18) should pay attention to this limitation of EEPROM.
- Writing data into an EEPROM will take longer time. So between two rewrite commands for the EEPROM, must make an interval (more than one second).

5-2. Operation and Program Example About Analog Input

To operate the input part of VB-6A / VB-3A module by its default values can using the following simple example programs.

Example #1

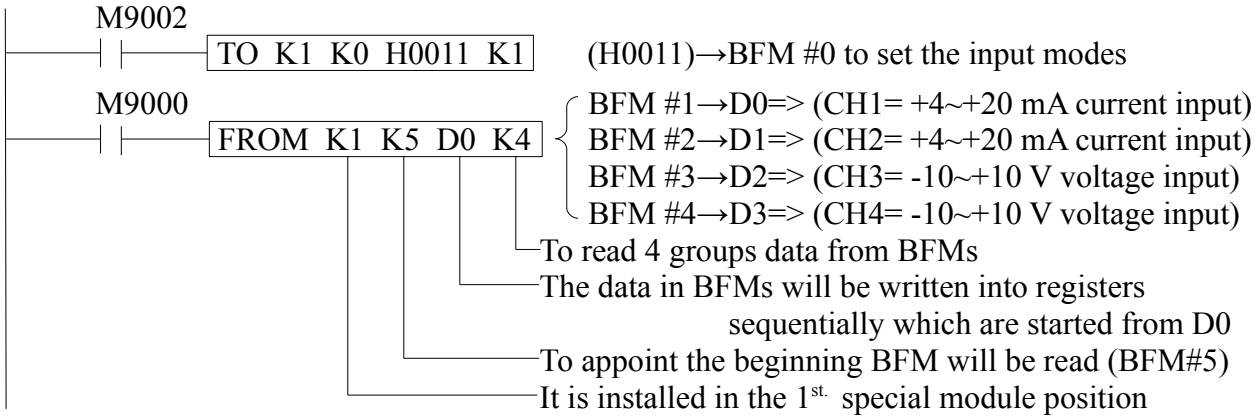

- At this program, the CH1 and CH2 are assigned to the +4 ~ +20 mA current inputs; the CH3 and CH4 are assigned to the -10 ~ +10 V voltage inputs. Since the program doesn't give the average times for results, the results will be generated from the average of 32 times.
- Operation procedure:

① First at all, to adjust the appropriate position of sliding switch on the module for each channel (which is located on the left side of the module).

② Turn OFF the power of the Main Unit, and then connect with the VB-6A / VB-3A module. After that, wire the I/O and power lines of the module. Set the Main Unit to STOP, and turn ON the power. To download the above program then switch the Main Unit to RUN.

③ Analog value of input channels will be read from the module and put the values to D0 (BFM #1), D1 (BFM #2), D2 (BFM #3) and D3 (BFM #4) in the Main Unit.

④ To check the digital values of D0, D1, D2 and D3, those are the analog inputs of VB-6A / VB-3A.

Example #2

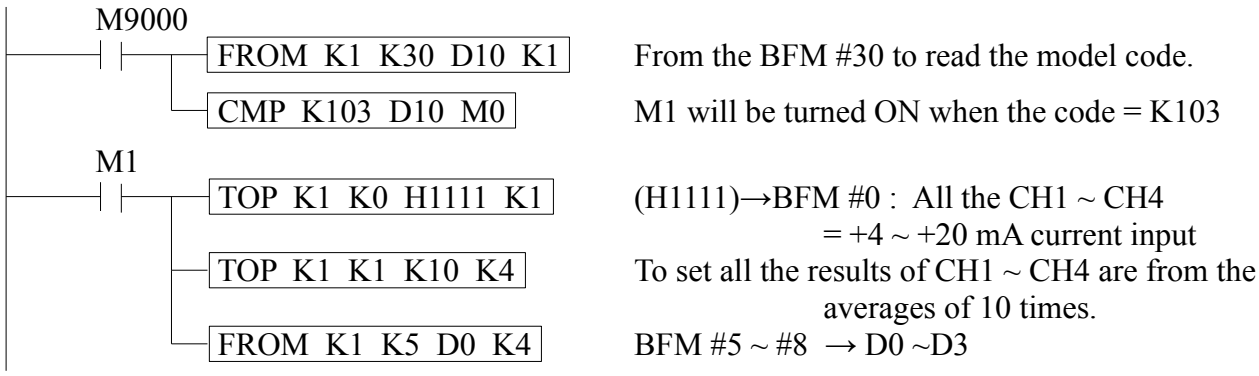

Cautions Regarding Operation

① Check whether the input wiring and/or expansion cables are properly connected on VB-6A / VB-3A module. (Refer to the Chapter #3. Wiring)

② Check that the VB system configuration rules have not been broken, i.e. the number of modules does not exceed 8.

③ Ensure that the correct input mode and switch position have been selected for the application.

④ Check there is no power overload on either the 5 V or 24 V << Power Input Requirement >>, remember the loading on the VB Main Unit or a powered extension unit varies according to the number of extension units or special function units connected.

5-3. Defining OFFSET and GAIN of Analog Analog Input

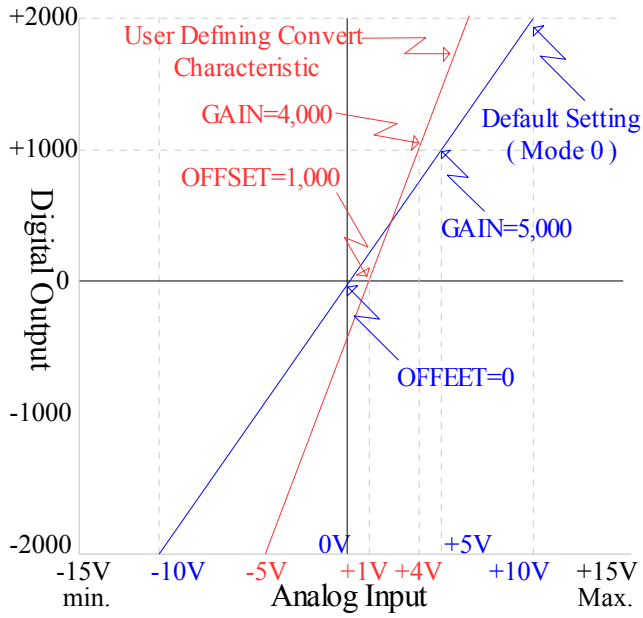

A/D Conversion Chart of Voltage Input Modes

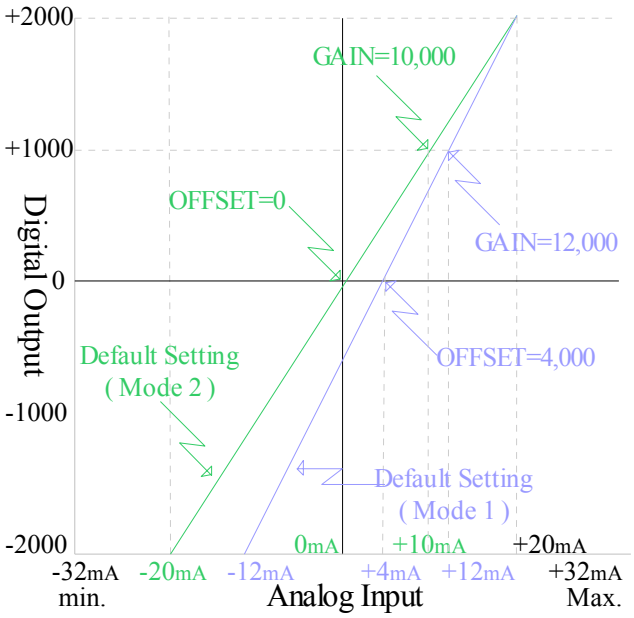

A/D Conversion Chart of Circuit Input Modes

The two diagrams above represent Analog to Digital conversion characteristic charts of the voltage input mode and the circuit input mode. Users may adjust those conversion characteristic charts depending on actual needs for particular application. To change the OFFSET value and GAIN value, the adjustment principles are specified as follows:

- **OFFSET** is the 'Position' of the calibrated line, identified at a digital output value of 0. The unit is mV or µA.

  (a) Negative offset
  (b) Zero offset
  (c) Positive offset

  Available range of OFFSET:
  Voltage input: -5 V (-5,000) ~ +5 V (+5,000)
  Current input: -20 mA (-20,000) ~ +20 mA (+20,000)

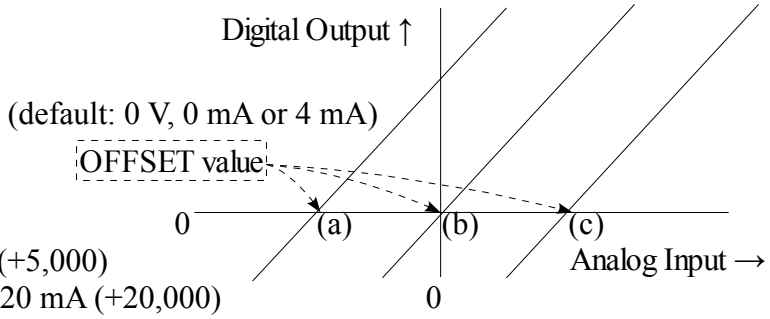

- **GAIN** determines the angle or slope of the calibration line, identified at a digital output value of 1000. The unit is mV or µA.

  Let the value of OFFSET = 0 :
  (d) Small gain = Large steps in digital readings
  (e) Medium gain
  (f) Large gain = Small steps in digital readings

  Available range of GAIN:
  Voltage input: [1V (+1,000) ~ 15V (+15,000)] + OFFEST
  Current input: [4mA (+4,000) ~ 32mA (+32,000)] + OFFSET

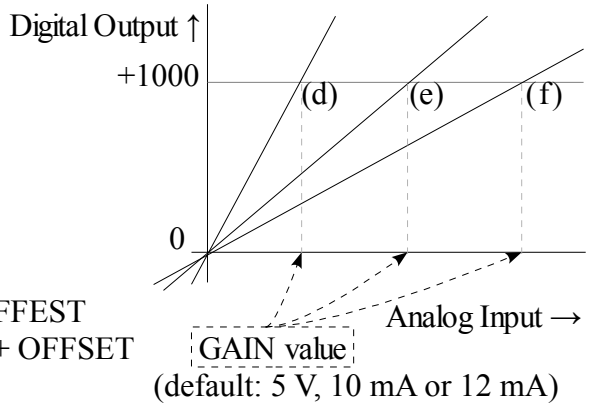

OFFSET and GAIN values can be set independently or together. And the values can be adjusted by user program in the VB series Main Unit (see the program Example #3 and #4).

- The following examples are for defining the OFFSET and GAIN values**:**

Example #3: Via the program to set the CH1's OFFSET = 0 V and GAIN = 2.5 V

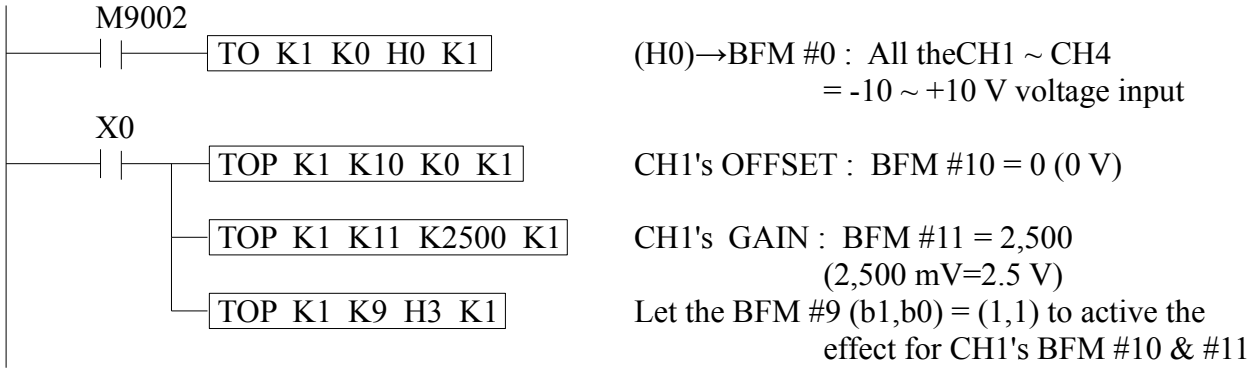

Example #4: Via the program to set the CH2's OFFSET = 2 mA and GAIN = 18 mA

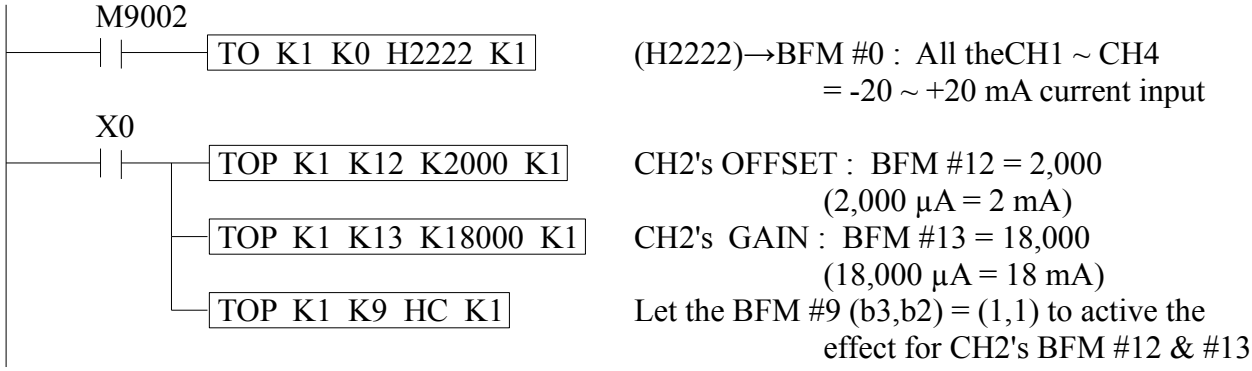

6. Analog Output Operating Instruction

The VB-6A module provides 2 channels analog output, they are CH1 & CH2; the VB-3A module provides 1 channel analog output, it is the CH1. So when operating the VB-3A module, please refer to the parts about CH1.

6-1. Allocation of Buffer Memory (BFM) About Analog Output

Data is transmitted between the VB-6A / VB-3A and the Main Unit via buffer memories (BFM).

BFM	Description		
#20	Output mode select	Default value = H00	(with latch function)
#21	CH #1 Output data	Default value = 0	(when the PLC power, OFF→ON)
#22	CH #2 Output data		
#23	Data holding mode	Default value = H00	(with latch function)

- The value of BFM #20 switches the analog output between voltage and current on each channel. It takes the form of a 2-digit hexadecimal number. The first digit will be the command for the channel 1 (CH1), and the second digit is for the channel 2 (CH2). The numeric values of these 2 digits respectively represent the following items:

  BFM #0 = H O O ==>

b15			b0
Digit #4	Digit #3	Digit #2	Digit #1
×	×	CH2	CH1

  ② ①

  When: O = 0 : Sets the channel to voltage output mode (0 V ~ +10 V).
  O = 1 : Sets the channel to current output mode (+4 mA ~ +20 mA).

  Switching the output mode resets the I/O characteristics to the factory-set characteristics. Refer to the section of << Charts of D/A Converter Characteristic >>.

  Example: Let the BFM #0 = H 1 0
  CH1 = 0 : Voltage output (0 V ~ +10 V)
  CH2 = 1 : Current output (+4 mA ~ +20 mA)

- While the programmable controller is in the STOP mode, the last output value in the RUN mode could be hold. To write a hexadecimal value in BFM #23 as follows can choose its analog output status (at the RUN→STOP condition).

  BFM #5 = H O O ==>

b15			b0
Digit #4	Digit #3	Digit #2	Digit #1
×	×	CH2	CH1

  ② ①

  When: O = 0 : Sets the channel to hold the output value. (If the PLC RUN→STOP)
  O = 1 : Sets the channel to the lowest output (OFFSET) value. (If the PLC RUN→STOP)

  Ex. When the power of PLC is kept ON and switched the Main Unit RUN→STOP.
  If BFM #23=H00 => Both the CH2 & CH1 will hold their output
  If BFM #23=H01 => The CH2 will hold its output, the CH1's output=OFFSET value
  If BFM #23=H10 => The CH2's output=OFFSET value, the CH1 will hold its output
  If BFM #23=H11 => Both the output of CH2 & CH1 = their own OFFSET values

- The value of BFM #20 ~ #23 can be written from its Main Unit by using the TO instruction.

BFM	Description
#24	To activate the excepted settings
#25	The OFFSET value of the CH1 (Default value = K0)
#26	The GAIN value of the CH1 (Default value = K5,000)
#27	The OFFSET value of the CH2 (Default value = K0)
#28	The GAIN value of the CH2 (Default value = K5,000)
#29	When its b0 = 1, all the A/D converted characteristics will be returned to the default values.
#30	Model code: VB-6A = K103 ; VB-3A = K104 (Read only)

- When to trigger the BFM #29, b0 = 1, all the analog to digital converted characteristics (including CH1 & CH2) will be returned to the default values. If a user sets incorrect converted characteristics to the module, to trigger the BFM #29, b0 =1 which can reset all the converted characteristics back to their default settings.
- When to trigger the BFM #24 (b1,b0) = (1,1), the content values of BFM #25 and #26 (which are the converted characteristics for CH1) will be activated and recorded to the EEPROM. And so forth, the (b3,b2) in the BFM #24 can use the same effect on the CH2, which may be set up the CH1 & CH2 respectively or simultaneously.

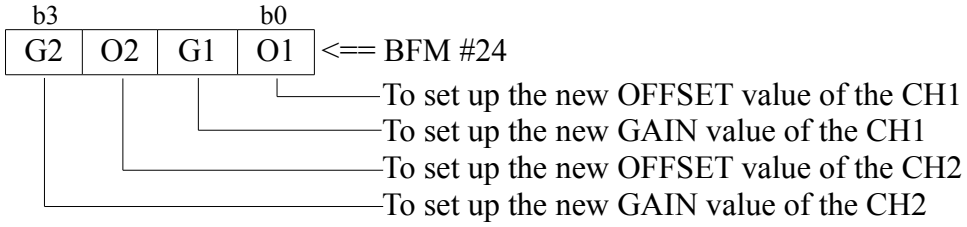

- The settings of BFM #25 ~ #28 shall be in the unit of mV or μA, which are specified by the input mode of BFM #20.
- The BFM #24 ~ #29 can be written from its Main Unit by using the TO instruction; the BFM #30 can be read to its Main Unit by using the FROM instruction.
- To adjust the conversion characteristics. First, the OFFSET value and GAIN value of the channel are required to be written (in BFM #25 ~ #28); and then, to trigger the corresponding bit in BFM #24.

Cautions

- The content value of BFM #20, BFM #23, OFFSET and GAIN settings (BFM #25 ~ #28) of each channel will be kept in EEPROM of the VB-6A / VB-3A module. Also, to reset the settings by BFM #29 will rewrite the data in EEPROM. The rewrite times of EEPROM is 10,000 times approximately; to operate those BFMs (#20, 23, 24 and 29) should pay attention to this limitation of EEPROM.
- Writing data into an EEPROM will take longer time. So between two rewrite commands for the EEPROM, must make an interval (more than one second).

6-2. Operation and Program Example About Analog Output

To operate the VB-6A / VB-3A module can using the following simple programs.

Example #5:

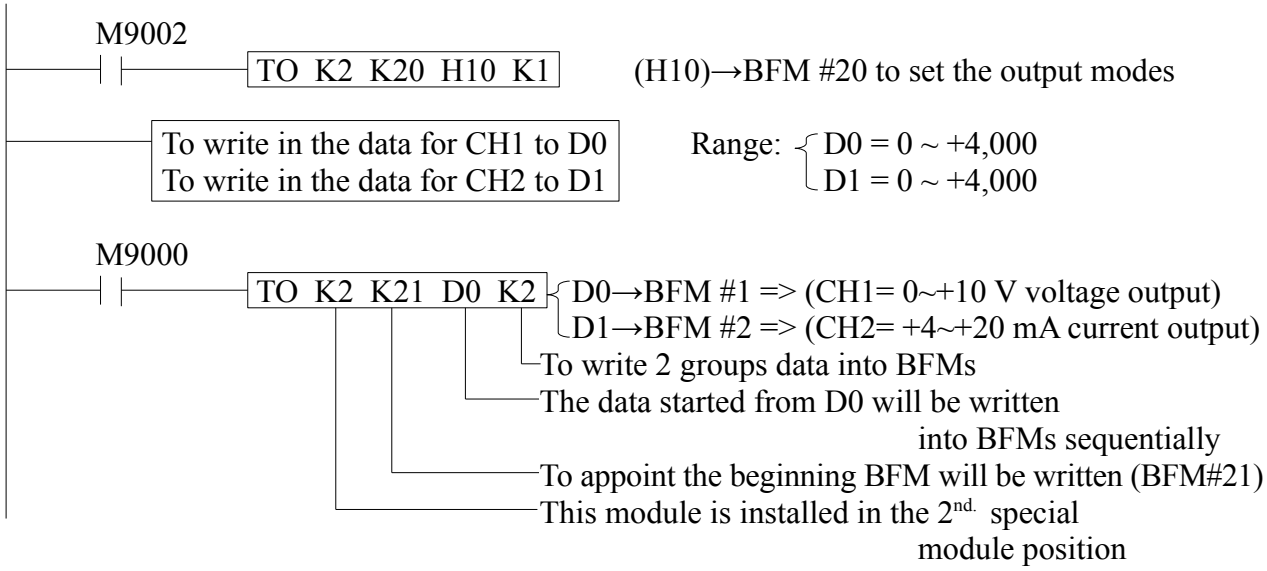

- In this program, the BFM #20 = H10 :
  The digit #1 = 0, CH1 will be a 0 ~ +10 V voltage output.
  The digit #2 = 1, CH2 will be a +4 ~ +20 mA current output.

Operation procedure:

① Turn OFF the power of the Main Unit, and then connect the VB-6A / VB-3A (in the program this module is installed in the 2nd. special module position). After that, wire the I/O and power lines of the module.

② Set the Main Unit to STOP, and turn ON the power. To download the above program then switch the Main Unit to RUN.

③ Analog values will be sent from D0 (BFM #1) and D1 (BFM #2) to the respective output channels of the VB-6A / VB-3A. When the Main Unit is in STOP, the analog outputs will be remain (those values has been set before stopping).

④ To set the values of D0 and D1, the analog outputs of VB-6A / VB-3A will follow digital inputs. For a detailed description, refer to Chapter #6-1 Allocation of Buffer Memory (BFM) About Analog Output.

Example #6:

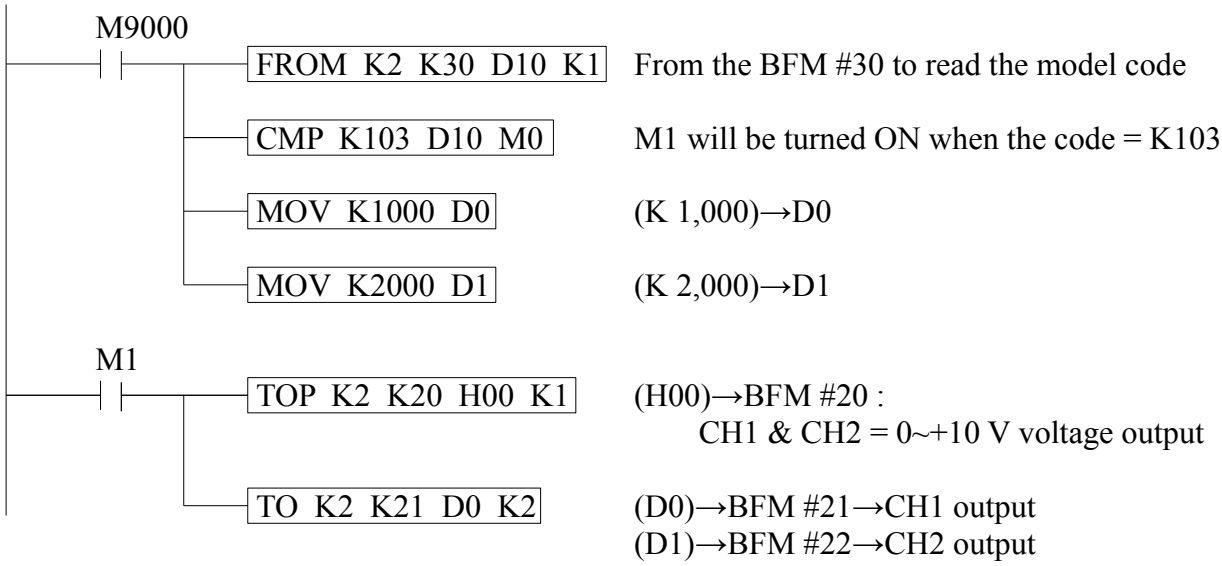

- To execute the program above, on the VB-6A / VB-3A output terminals will be:
  Between VOUT1 and COM has 2.5 V output.
  Between VOUT2 and COM has 5 V output.

Cautions Regarding Operation

① Check whether the output wiring and/or expansion cables are properly connected on VB-6A / VB-3A analog output part of the module. (Refer to Chapter #3-2 Terminal Layouts of Analog Output Part)

② Check that the VB system configuration rules have not been broken, i.e. the number of modules does not exceed 8.

③ Ensure that the correct output mode has been selected for the application.

④ Check that there is no power overload on either the 5 V or 24 V << Power Input Requirement >>, remember the loading on the VB Main Unit or a powered extension unit varies according to the number of extension units or special function units connected.

⑤ Put the Main Unit into RUN.

⑥ After turning ON or OFF the 24 V DC power for analog signals, the analog output may fluctuate for approximately 1 second. This is due to time delays in the power supply from the Main Unit or differences in start time. For this reason, be sure to take preventive measures so that this output fluctuation will not affect the external units.

6-3. Defining OFFSET and GAIN of Analog Output

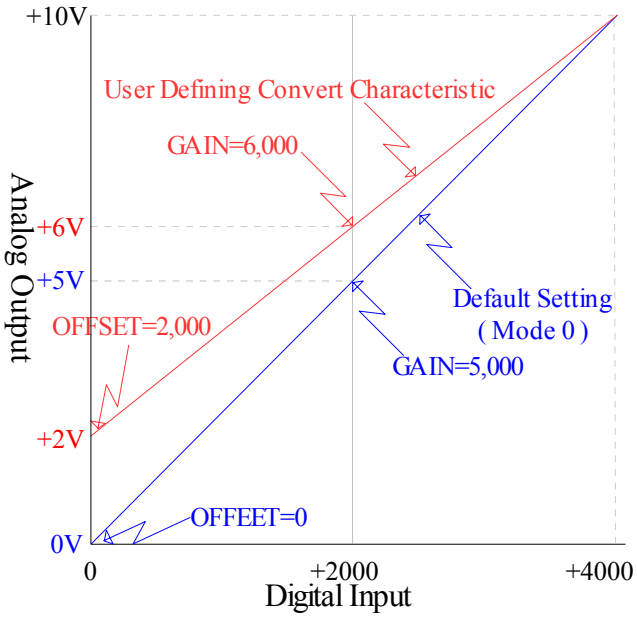

D/A Conversion Chart of Voltage Output Modes

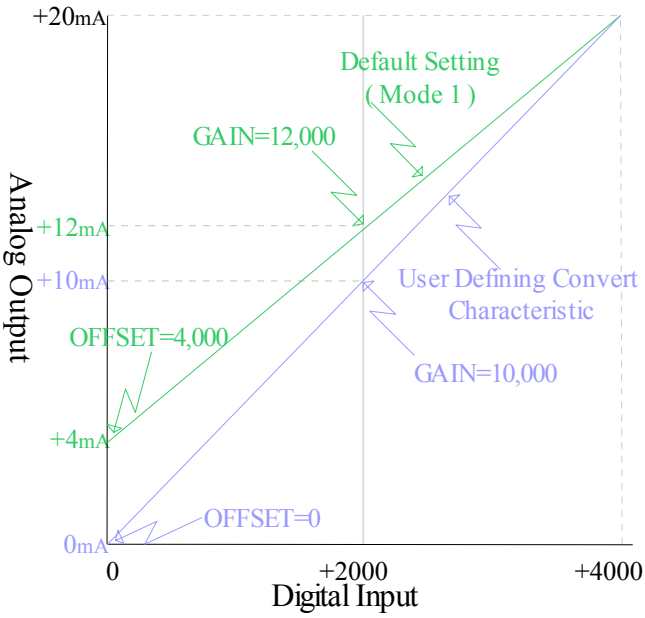

D/A Conversion Chart of Circuit Output Modes

The two diagrams above represent Digital to Analog conversion characteristic charts of the voltage output mode and the circuit output mode. Users may adjust those conversion characteristic charts depending on actual needs for particular application. To change the OFFSET value and GAIN value, the adjustment principles are specified as follows:

- **OFFSET** is the 'Position' of the calibrated line, identified at a digital input value of 0. The unit is mV or µA.

  (a) Positive offset
  (b) Zero offset

  Available range of OFFSET:
  Voltage output: 0 V (0) ~ +5 V (+5,000)
  Current output: 0 mA (0) ~ +20 mA (+20,000)

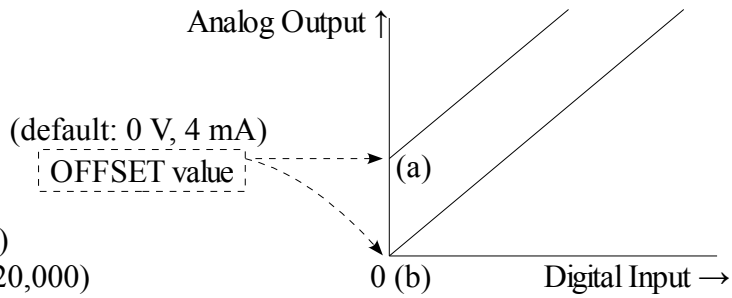

- **GAIN** determines the angle or slope of the calibration line, identified at a digital input value of 2000. The unit is mV or µA.

  Let OFFSET=0 :
  (c) Large gain = Large steps in analog outputs
  (d) Medium gain
  (e) Small gain = Small steps in analog outputs

  Available range of GAIN:
  Voltage output: [1V (+1,000) ~ 15V (+15,000)] + OFFEST
  Current output: [4mA (+4,000) ~ 32mA (+32,000)] + OFFSET

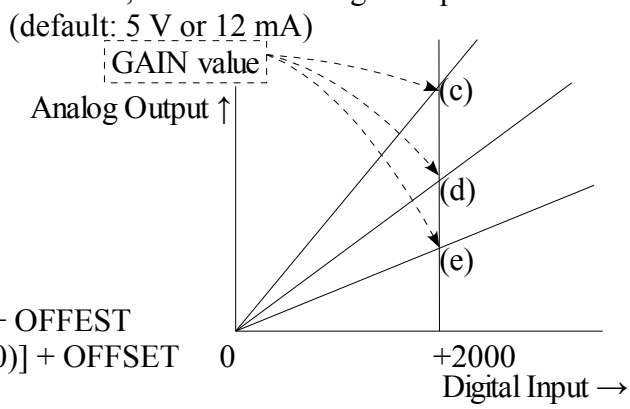

OFFSET and GAIN values can be set independently or together. And the values can be adjusted by user program in the VB series Main Unit (see the program Example #7).

- The following example is for defining the OFFSET and GAIN values**:**

Example #7: Via the program to set the CH1's OFFSET = 0 mA and GAIN = 10 mA, and the convert characteristic of CH2 still keeps the default setting.

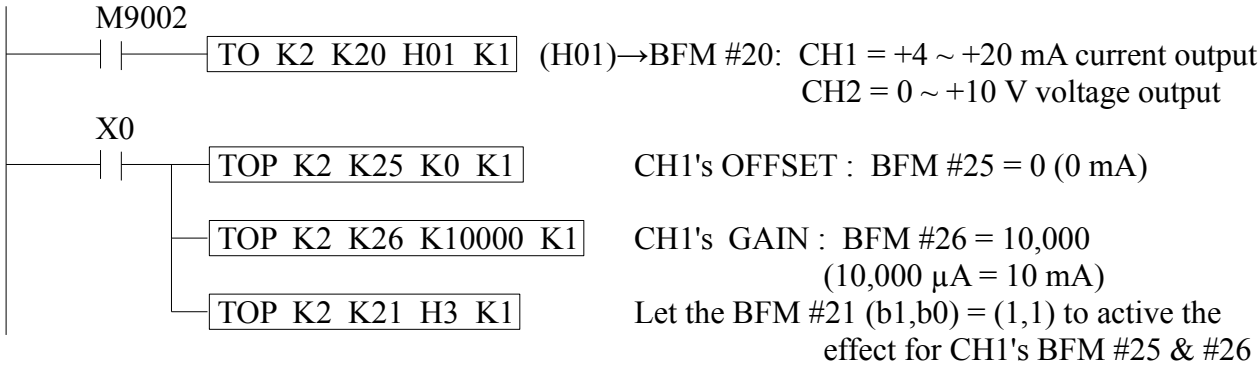

VIGOR ELECTRIC CORP.

Tel: 886-2-2620-4393 Fax: 886-2-2620-4976
http://www.vigorplc.com